International Journal of Innovative Computing, Information and Control
Volume **9**, Number **9**, September **2013**

ICIC International ©2013 ISSN 1349-4198
pp. 3807–3816

COMBINATION FORECASTING METHOD FOR STORAGE RELIABILITY PARAMETERS OF AEROSPACE RELAYS BASED ON GREY-ARTIFICIAL NEURAL NETWORKS

Zhao-bin Wang[1,2], Guo-fu Zhai[1], Xiao-yi Huang[1] and Dang-xiang Yi[3]

[1]School of Electrical Engineering and Automation
Harbin Institute of Technology
No. 92, West Dazhi Street, Nangang District, Harbin 150001, P. R. China
{ zbwang; gfzhai }@hit.edu.cn; hit.huangxy@gmail.com

[2]School of Electronics and Information
Jiangsu University of Science and Technology
No. 2, Mengxi Road, Zhenjiang 212003, P. R. China

[3]Qing-He Building F8
Beijing 100085, P. R. China
ydxiang@126.com

Received August 2012; revised December 2012

Abstract. *Based on a Grey-Artificial Neural Networks (G-ANN) model, this study proposes a combination intelligent forecasting method, which is applied for contact resistances of aerospace relays' prediction in long term storage. The storage reliability of aerospace relays is subject to many nonlinear factors, while the time series forecasting in essence aims to realize a nonlinear mapping. The G-ANN combination forecasting model has been built up. It has the adaptability of neural networks in the nonlinear environment and the trait of Grey theory to weaken the fluctuation of data sequences. There are three phases in the modeling process, including data initialization phase, Grey prediction phase and ANN prediction phase. This approach forecasts the contact resistance degradation of aerospace relays in the accelerated storage test by various Grey system models and G-ANN method. In order to obtain accurate accelerated test data, a testing system of relay storage parameters was designed and developed. The testing system can automatically measure the contact resistances of 40 aerospace relays at the same time when the relays are under different temperature stress. Compared with other forecasting methods, the G-ANN method shows the highest accuracy. In addition, this study also provides the basis and reference for contact life prediction of aerospace relays in accelerated degradation storage test.*

Keywords: Aerospace relays, Storage reliability, Grey system theory, Artificial neural networks, Combination forecasting

1. **Introduction.** The aerospace relay is widely used in missiles, spacecrafts, launch vehicles, satellites and related ground control equipments. Since modern weapons feature the long-term storage and one-off consumption, the components and the parts involved should have a perfect environmental suitability and a long storage life. Therefore, the storage reliability of aerospace relays directly affects the reliability of aerospace and defense armament systems. For the relay performance, the contact resistance is an important reliability parameter [1,2], and the contact failure caused by the contact resistance increasing is the main failure mode of the aerospace relays in storage [3]. It apparently indicates that the contact resistance of relays is a sensitive parameter for the relay storage time.

Therefore, the study on the forecasting of aerospace relay contact resistances in the storage degradation process is important either in theoretical analysis or in practical relay designing, manufacturing, and storage reliability enhancing.

There are few researches on the aspect of aerospace relay storage reliability both in China and abroad. The literature [4] has contributed to the prediction of the contact voltage value by using the Grey system GM $(1,1)$ model, but the accuracy is limited. In optimum scheme design of storage accelerated life test for relay, L. Li and W. Xu have built the Bayesian estimation method of relay accelerated life test using the Markov chain Monte Carlo of Gibbs Sampling method, and relay life parameters are obtained by the maximum-likelihood estimator in normal stresses [5].

The GM $(1,1)$ forecasting model has been widely applied in various fields [7-11] due to its small data input, high modeling precision and simple forecasting [6]. Artificial neural networks have the characteristics of the fault tolerance, self-adapting, self-organization, the associational function and the accurate mapping ability to the non-linear problem. It may carry on the free precision to any continual nonlinear function approaching. It is one of the effective means to solve problems in many science and engineering fields [12-16]. The Grey system theory and the artificial neural network have been well merged to build up the Grey neural network combination forecasting model, which learns from each other's strong points to offset one's own weaknesses. The storage reliability parameter of aerospace relays (i.e., contact resistances degradation value) has been predicted by this combination model, and the model errors are analyzed and compared so as to gain a more satisfactory forecasting result.

2. Establishing the Forecasting Models.

2.1. Grey system theory-based forecasting models.

The Grey system theory-based forecasting model forecasts from the accumulated generating operation (AGO) of raw data. The advantages of Grey system theory-based forecasting model include the discrete data continuation, and the operation simplification through replacing the difference by the differential coefficient. In addition, the change of raw data which is not obvious may offset many random interference factors by AGO. In this paper, the storage reliability parameter (contact resistances) of certain aerospace relay in the accelerated storage test is predicted by two Grey models, the GM $(1,1)$ and the Unbiased GM $(1,1)$.

2.1.1. *The GM (1, 1) forecasting model.* The GM $(1,1)$ model is the most popular dynamic predictive model in the Grey system theory, which is made up by the first order differential equation about one variable. The modeling steps are as follows.

The time series data of contact resistances of certain aerospace relay measured in the accelerated storage test is

$$\boldsymbol{X}^{(0)} = \left(x^{(0)}(1), x^{(0)}(2), x^{(0)}(3), x^{(0)}(4), \ldots, x^{(0)}(n)\right) \tag{1}$$

where $x^{(0)}(j) \geq 0$, $j = 1, 2, \ldots, n$. And, the Grey forecasting model is built by processing and fitting the time series $\boldsymbol{X}^{(0)}$.

Step 1. Build the accumulated generating operation series.

Accumulated generating operation, abbreviated to AGO, implies to add the raw data in series successively to obtain the generating series. $\boldsymbol{X}(1)$ is the AGO series of $\boldsymbol{X}(0)$, and written as

$$x^{(1)}(j) = \sum_{i=1}^{j} n x^{(0)}(i), \quad j = 1, 2, \ldots, n \tag{2}$$

Step 2. Build the MEAN generating operation series $\boldsymbol{Z}^{(1)}$, the albinism differential equation, and solution parameters $[a, b]^T$.

$\boldsymbol{Z}^{(1)}$ is the MEAN series of $\boldsymbol{X}(1)$, in symbol $\boldsymbol{Z}^{(1)} = (z^{(1)}(1), z^{(1)}(2), z^{(1)}(3), z^{(1)}(4), \ldots, z^{(1)}(n))$, $z^{(1)}(j) = 0.5\left(x^{(1)}(j) + x^{(1)}(k-1)\right)$.

The albinism differential equation is

$$\frac{dx^{(1)}}{dt} + ax^{(1)}x^{(1)} = b \tag{3}$$

Discrete Formula (3),

$$x^{(0)}(j) + az^{(1)}(j) = b, \quad j = 2, 3, \ldots, n \tag{4}$$

where a is the developing coefficient and b is the Grey action coefficient. The coefficient $\hat{\boldsymbol{\alpha}}$ in Formula (5) is obtained by using the least squares method.

$$\hat{\boldsymbol{\alpha}} = [a, b]^T = (\boldsymbol{B}^T\boldsymbol{B})^{-1}\boldsymbol{B}^T\boldsymbol{Y} \tag{5}$$

where,

$$\boldsymbol{B} = \begin{pmatrix} -z^{(1)}(2) & 1 \\ -z^{(1)}(3) & 1 \\ \vdots & \vdots \\ -z^{(1)}(n) & 1 \end{pmatrix}, \quad \boldsymbol{Y} = \begin{pmatrix} x^{(0)}(2) \\ x^{(0)}(3) \\ \vdots \\ x^{(0)}(n) \end{pmatrix} \tag{6}$$

Step 3. Determine the time responses equation and the GM $(1, 1)$ model. In the initial condition, $x^{(1)}(1) = x^{(0)}(1)$, solving the Equation (3) results in the time responses equation as

$$\hat{x}^{(1)}(j+1) = \left(x^{(0)}(1) - \frac{b}{a}\right)e^{-aj} + \frac{b}{a}, \quad j = 0, 1, 2, \ldots, n \tag{7}$$

$\hat{x}^{(1)}$ is said to be the inverse accumulated generating operation (IAGO) series of $\boldsymbol{X}(0)$.

It turned out that

$$\hat{x}^{(0)}(j+1) = \hat{x}^{(1)}(j+1) - \hat{x}^{(1)}(j) = \left(x^{(0)}(1) - \frac{b}{a}\right)(1 - e^a)e^{-aj} \tag{8}$$

Step 4. Solve the fitted values of $\boldsymbol{X}(1)$, and revert the fitted values of $\boldsymbol{X}(0)$.

Following Formula (7), it can be found that

$$\hat{\boldsymbol{X}}^{(1)} = \left(\hat{x}^{(1)}(1), \hat{x}^{(1)}(2), \cdots, \hat{x}^{(1)}(n)\right) \tag{9}$$

And following Formula (8), the fitted values of $\boldsymbol{X}(0)$ is,

$$\hat{\boldsymbol{X}}^{(0)} = \left(\hat{x}^{(0)}(1), \hat{x}^{(0)}(2), \cdots, \hat{x}^{(0)}(n)\right) \tag{10}$$

Step 5. Residual test.

The residual of $\varepsilon^{(0)}(j)$ and the relative error $\Delta(j)$ can be calculated by Formulae (11) and (12), as the following

$$\varepsilon^{(0)}(j) = x^{(0)}(j) - \hat{x}^{(0)}(j) \tag{11}$$

$$\Delta(j) = \left|\frac{\varepsilon(j)}{x^{(0)}(j)}\right| \times 100\% \tag{12}$$

2.1.2. *Unbiased GM (1, 1) model.* The unbiased GM $(1,1)$, abbreviated to U-GM $(1,1)$, eliminates the inherent deviation of the conventional GM $(1,1)$. In fact it is an unbiased exponential model. The modeling steps are as follows:

Steps 1-2. It is the same as the Steps 1-2 of GM $(1,1)$.

Step 3. Solve the coefficients of U-GM $(1,1)$.

$$\hat{a}' = \ln \frac{2-a}{2+a}, \quad \hat{A} = \frac{2b}{2+a} \tag{13}$$

Step 4. Build the original sequence model.

$$\begin{aligned} &\hat{x}^{(0)}(1) = x^{(0)}(1) \\ &\hat{x}^{(0)}(j) = \hat{A}e^{\hat{a}'(j-1)}, \quad j = 2, 3, \cdots, n \end{aligned} \tag{14}$$

Compared with GM $(1,1)$ it can be easily seen that the unbiased GM $(1,1)$ is superior in properties and has more extensive application scope. Without the need for IAGO, the U-GM $(1,1)$ simplifies the modeling process and enhances the efficiency.

2.2. **Artificial neural networks-based forecasting models.** The artificial neural networks which originated in the mid 1980s are a new comprehensive discipline. The artificial neural networks-based model is a mathematics model, which uses a similar structure of brain nerve synaptic connections to process information [13]. It features self-learning ability, fault tolerance and adaptability. Without the hypothesis with a priori function, it could still summarize the law from the original experimental data and predict the future trend from the law of automatic summary. It is widely used in function fitting, data predicting, optimization controlling and so on. Artificial neural networks can accurately reflect physical quantities with complex causal relationships after appropriate training. The BP (Back Propagation) networks are multilayer feed-forward networks trained with error back propagation algorithm. It is a widely used neural networks model, which could realize the mapping of the nonlinear function. According to Kolmogorov's theorem, there are always neural networks with three layers, which are capable of accurately realizing any continuous mapping.

In this paper the forecasting model of neural networks is also established with the three-layer feed-forward networks, and the output of the model is shown as below:

$$Y = f\left(\sum_{i=1}^{p} c_i W_{ij} - \gamma_j\right) \tag{15}$$

where c_i is the activation value of input layer and hidden layer; W_{ij} is the connection weight between nodes j and i, and its initial value is small and random; γ_j is the unit threshold of output layer; $f(x)$ is a nonlinear transfer function which is usually taken as Sigmoid function:

$$f(x) = \frac{1}{e^{-x}+1} \tag{16}$$

The algorithm of the three-layer BP networks model could be seen in literature [14]. The main process is as follows:

Step 1. Randomly set the connection weight matrix from input layer to hidden layer and from hidden layer to output layer, then set the training error ε;

Step 2. According to the study samples, supervise and train the tutor, calculate error between the expected networks output and the actual output, and then use the BP algorithm to adjust the connection weight coefficient from input layer to hidden layer and from hidden layer to output layer;

Step 3. If the model's output training error $> \varepsilon$, jump back to Step 2, otherwise end the training. At last, calculate the predictive value according to the connection weight coefficient and the threshold value from the Formula (15).

2.3. **Grey-artificial neural networks-based forecasting models.** Both the Grey system and the neural networks have certain similarities on the information features and can be integrated. In the Grey theory, the Grey number is defined as "when we only know the value range but not the exact number, we called it Grey number". From this definition, the output of neural networks actually is the Grey number, because the output value of neural networks of the system approximates to a fixed value with certain precision, and due to the system error, the output value often fluctuates around a central value. The Grey artificial neural networks model combines the neural networks with the Grey system, forecasts the original test data sequence by using the combined model, and could make full use of the neural networks' advantages of distribution parallel processing, nonlinear mapping, self-learning ability and weakening the sequence volatility in the Grey system theory.

This study attempts to apply the Grey artificial neural networks to predicting the relay contact resistances value series obtained through the accelerated storage degradation test by using the three-layer BP neural networks model. The structure of the Grey artificial neural networks forecasting method is shown in Figure 1. The specific modeling procedure is as follows:

Step 1. Grey model prediction. The above two Grey system models are adopted to forecast the measured contact resistances data sequence, and the prediction value of the Grey system model is obtained, and the error $\varepsilon^{(0)}(j)$ is calculated;

Step 2. In order to get the prediction results which are mostly close to the measured value, the predicted value of two kinds of Grey system models is taken as the input of the BP neural networks model, while the output is the measured value of the corresponding moment;

Step 3. Train the networks through adequate test data;

Step 4. Forecast the contact resistances with the networks which have been trained and accords with an error range;

In this way, a nonlinear mapping relation is set up between the actual measured value and the combination forecasting value of the Grey forecasting model and the neural networks. With the strong nonlinear mapping ability of the neural networks, the higher

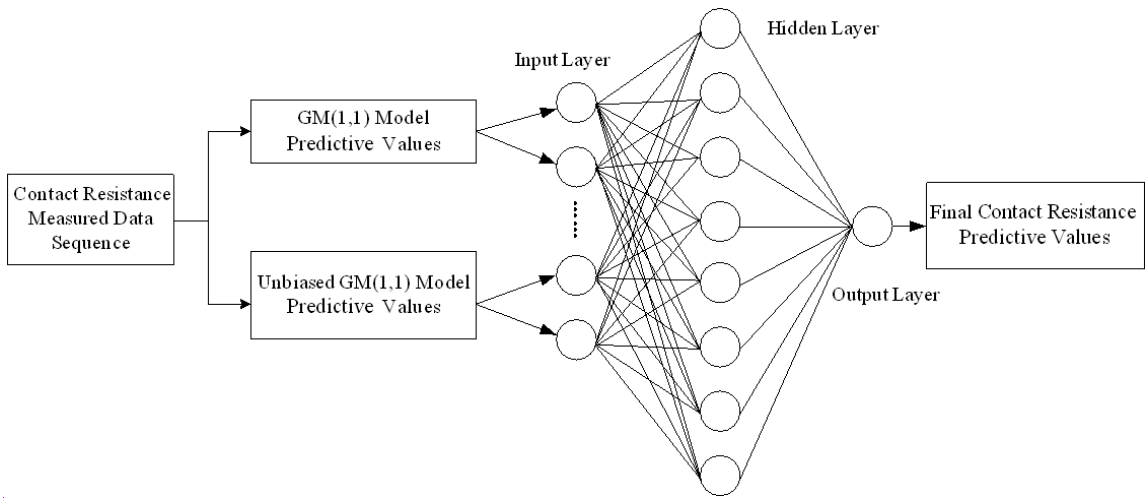

FIGURE 1. Structure schematic of G-ANN method

precision of the contact resistances prediction results could be gained at the networks output.

3. Prediction of Storage Reliability Parameters of Aerospace Relays.

3.1. Accelerated storage degradation test of aerospace relays. The aerospace relay is a complicated component. Its failure mechanism is intricate, as it is subject to the influence of various environmental factors in the storage period. The reference [4] indicates that the temperature stress is the major influential factor of the relay failure. So choosing the temperature stress as the accelerated factor, we test relay contact resistances and relay time parameters at certain time with the testing system of self-developed relay storage parameters. The major structures and physical map of this testing system are shown in Figure 2 [17]. This testing system can monitor contact resistances of 40 aerospace relays by turning under different temperatures and transmitting the test data to the host computer for processing.

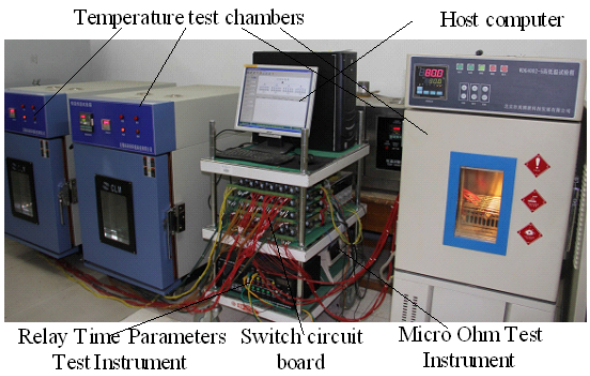

(a) Physical map of relay testing system

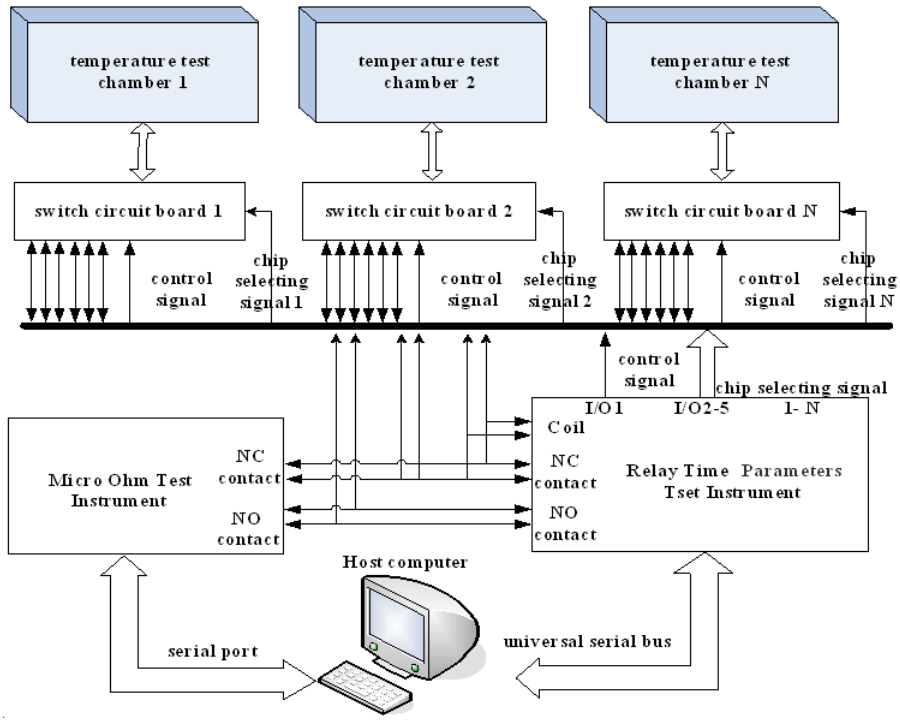

(b) major structures of relay testing system

FIGURE 2. Major structures and physical map of relay testing system

3.2. **Prediction of aerospace relay contact resistances.** In order to predict the contact resistances of aerospace relays in the storage process, one relay is randomly selected from the group of forty ones in the accelerated storage test. The 26 measurements are shown in the following table.

TABLE 1. Measured data of contact resistances

Times	**1**	**2**	**3**	**4**	**5**	**6**	**7**	**8**	**9**	**10**	**11**	**12**	**13**
R (mΩ)	8.080	8.036	8.471	8.656	8.267	8.893	9.156	9.227	9.824	9.947	10.312	10.650	10.683
Times	**14**	**15**	**16**	**17**	**18**	**19**	**20**	**21**	**22**	**23**	**24**	**25**	**26**
R (mΩ)	10.958	11.282	11.480	11.976	12.322	12.691	12.856	13.055	13.257	13.191	14.142	13.925	14.276

We choose the measured data of the former 24 measured data as the original data sequence, and build the prediction models by GM $(1,1)$ and U-GM $(1,1)$, then take the results of two Grey models as the input of the Grey artificial neural networks, and at the same time, train the Grey neural networks by the real experiment data of the former 24. The latter two measured data are then chosen as the standard samples to be predicted.

3.2.1. *GM (1, 1) model prediction.* As mentioned earlier, by means of the least squares method the estimation coefficient is obtained,

$$\hat{\alpha} = [a, b]^T = [-0.0241, 7.8987]^T \tag{17}$$

According to Formula (8), the GM $(1,1)$ model is built as the following:

$$\begin{aligned} \hat{x}^{(0)}(j+1) = & \left(x^{(0)}(1) - \frac{b}{a}\right)(1-e^{a})e^{-aj} \\ & \left(8.0799 + \frac{7.8987}{0.0241}\right)\left(1 - e^{-0.0241}\right)e^{-0.0241j} \end{aligned} \tag{18}$$

3.2.2. *Unbiased GM (1, 1) model prediction.* The estimation coefficients $\hat{a}'$ and $\hat{A}$ of U-GM $(1,1)$ can be calculated by Formula (13).

$$\begin{aligned} \hat{a}' &= \ln\frac{2-a}{2+a} = 0.02410 \\ \hat{A} &= \frac{2b}{2+a} = 7.9950 \end{aligned} \tag{19}$$

So, the U-GM $(1,1)$ is established, and the prediction formula of original sequence $\hat{x}^{(0)}(j)$ can be built as following:

$$\hat{x}^{(0)}(j) = \hat{A}e^{\hat{a}'(j-1)} = 7.9950e^{0.02410(j-1)}, \quad j = 2, 3, \cdots, n \tag{20}$$

3.2.3. *Grey artificial neural networks model prediction.* The prediction model is built by GM $(1,1)$ and U-GM $(1,1)$. Then the results of two Grey models are taken as the input of the Grey artificial neural networks. As the steps in Section 2.3, we predict the contact resistances by using the Grey artificial neural networks combination forecasting model, the G-ANN for short. The BP neural networks are applied. The number of hidden layer neuron is 12, the output layer 1, the learning rate 0.05, and the minimum error of training goals is 0.0001. To estimate the prediction accuracy, the networks are trained by the real experimental data of the former 24 values, and the latter two measured data are taken as accuracy detection samples. From Figure 3 we can see that the training of G-ANN has met the error requirement at the 17th epoch. And Figure 4 is the prediction curve and real data of G-ANN.

The results of different prediction models are shown in Table 2.

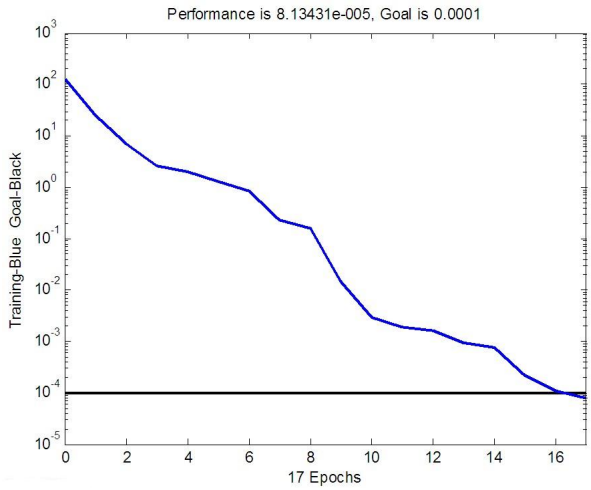

FIGURE 3. Change graph of network error performance in training

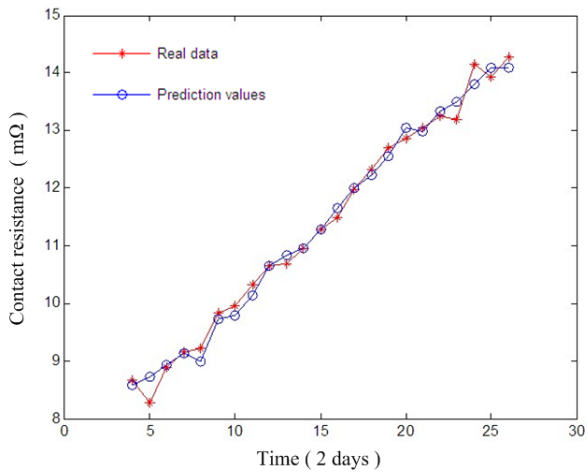

FIGURE 4. Prediction curve and real data of G-ANN

TABLE 2. Results of different model prediction

Times	*Measured data*	*Grey prediction value*		*Residuals*			*G-ANN*
		GM(1,1)	*U-GM(1,1)*	*GM(1,1)*	*U-GM(1,1)*	*G-NN*	
1	8.080	8.080	7.995	0.000	0.085	0.000	8.080
2	8.036	8.192	8.190	−0.156	−0.154	0.000	8.036
3	8.471	8.392	8.390	0.079	0.081	0.000	8.471
4	8.656	8.596	8.595	0.060	0.062	0.048	8.608
5	8.267	8.806	8.804	−0.539	−0.537	−0.518	8.786
6	8.893	9.021	9.019	−0.128	−0.126	−0.114	9.007
7	9.156	9.241	9.239	−0.085	−0.083	−0.092	9.248
8	9.227	9.466	9.464	−0.239	−0.237	−0.252	9.479
9	9.824	9.697	9.695	0.127	0.129	0.127	9.697
10	9.947	9.934	9.932	0.013	0.016	0.026	9.921
11	10.317	10.176	10.174	0.141	0.143	0.151	10.166
12	10.650	10.424	10.422	0.225	0.228	0.224	10.426
13	10.683	10.679	10.676	0.004	0.007	−0.002	10.685
14	10.958	10.939	10.937	0.018	0.021	0.018	10.940
15	11.282	11.206	11.203	0.076	0.079	0.082	11.200
16	11.480	11.480	11.477	0.001	0.004	0.011	11.470
17	11.976	11.760	11.757	0.217	0.219	0.224	11.752
18	12.322	12.046	12.044	0.276	0.279	0.277	12.045
19	12.691	12.340	12.337	0.351	0.354	0.346	12.345
20	12.856	12.641	12.638	0.215	0.218	0.214	12.643
21	13.055	12.950	12.946	0.105	0.108	0.116	12.939
22	13.257	13.266	13.262	−0.008	−0.005	0.005	13.252
23	13.191	13.589	13.586	−0.398	−0.394	−0.405	13.596
24	14.142	13.921	13.917	0.221	0.225	0.230	13.912
25	13.925	14.260	14.257	−0.336	−0.332	−0.206	14.130
26	14.276	14.608	14.604	−0.332	−0.328	0.003	14.273

4. **Accuracy and Error Analyses of Forecasting Models.** In order to validate the forecasting effect of relay contact resistances in different models, four error evaluation criteria are adopted.

The mean absolute error is

$$MAE = \frac{1}{N}\sum_{t=1}^{N}|y_t - \hat{y}_t| \tag{21}$$

The mean square error is

$$MSE = \frac{1}{N}\sqrt{\sum_{t=1}^{N}(y_t - \hat{y}_t)^2} \tag{22}$$

The mean square percent error is

$$MSPE = \left(\frac{1}{N}\sqrt{\sum_{t=1}^{N}\left(\frac{y_t - \hat{y}_t}{|y_t|}\right)^2}\right) \times 100\% \tag{23}$$

The mean absolute percent error is

$$MAPE = \frac{1}{N}\sum_{t=1}^{N}\frac{|y_t - \hat{y}_t|}{|y_t|} \tag{24}$$

With Formulae (21)-(24), the performance evaluation and the comparison of different models are calculated in Table 3.

Table 3. Error analyses of different forecasting models

Model	***GM (1,1)***	***U-GM (1,1)***	***G-ANN***
MAE	0.167	0.171	0.142
MSE	0.0427	0.0428	0.0388
MSPE	0.041%	0.042%	0.035%
MAPE	0.0152	0.0157	0.0129

As in the table above, the smaller the MAE, MSE, MSPE and MAPE is shown, the better the prediction effect. From the error analyses of the prediction by different models, we can find that the predicted value of G-ANN is much closer to the real data and well reflects the increasing trend of relay contact resistances. The prediction results of the Grey system theory are modified by means of the combination with artificial neural networks, and the error is reduced and the accuracy improved. Therefore, we can illustrate that G-ANN is better than the Grey model in forecasting relay contact resistances, and the prediction accuracy is much higher.

5. **Conclusions.** Based on the Grey system theory and the artificial neural networks, a Grey artificial neural networks (G-ANN) combination forecasting method which is well nonlinear adaptable is established. This combination forecasting model has the advantages of the neural networks' capability of nonlinear adaptable information processing as well as the Grey system theory's capability of simple predictive method and less data requiring. Contact resistances of certain aerospace relay in the accelerated storage test are also predicted by the G-ANN model. After comparing with other forecasting methods, we find that the G-ANN prediction accuracy is higher than that of the Grey model. These studies provide a new and effective approach for the prediction of the aerospace relay storage life.

In addition, further research is also required for the study and analysis of the optimization and efficiency performance of combination model in the next phase.

Acknowledgment. The authors would like to express their great thanks to the support of the State 863 Project of China (No. 2009AA04Z110).

REFERENCES

[1] F. Y. Guo and Z. H. Chen, *Electrical Contacts Theory Applications and Technology*, China Electric Power Press, Beijing, 2008.

[2] M. Z. Rong, *Electrical Contacts Theory*, China Machine Press, Beijing, 2004.

[3] A. C. Shang, Military sealed relays non-work storage reliability research, *The 8th National Reliability Physical Seminar*, Jiayuguan, China, 1999.

[4] J. G. Lu, Y. Y. Luo, W. H. Li, F. B. Meng and L. Z. Wang, Storage life test and failure analysis of aerospace relays, *Transactions of China Electrotechnical Society*, vol.24, pp.54-59, 2009.

[5] L. Li and W. Xu, Optimum scheme design and analysis of accelerated life test for sealed electromagnetic relay, *Low Voltage Apparatus*, vol.4, pp.13-16, 2010.

[6] J. L. Deng, *Gray Prediction and Gray Decision*, Huazhong University of Science and Technology Press, Wuhan, China, 2002.

[7] Y. Hao, T.-C. J. Yeh et al., A gray system model for studying the response to climatic change: The Liulin karst springs, China, *Journal of Hydrology*, vol.328, pp.668-676, 2006.

[8] Y.-T. Hsu, H.-F. Hung, J. Yeh and M.-C. Liu, Forecast of financial time series based on grey self-organizing maps, *International Journal of Innovative Computing, Information and Control*, vol.6, no.2, pp.475-486, 2010.

[9] S.-J. Huang and C.-L. Huang, Control of an inverted pendulum using grey prediction model, *IEEE Transactions on Industry Applications*, vol.36, pp.452-467, 2000.

[10] Q. Zheng and J. Gu, Sensor fault detection and identification based on gray model for autonomous underwater vehicle, *Mediterranean Journal of Measurement and Control*, vol.5, pp.71-77, 2009.

[11] E. Kayacan, B. Ulutas and O. Kaynak, Grey system theory-based models in time series prediction, *Expert Systems with Application*, vol.37, pp.1784-1789, 2010.

[12] S. Haykin, *Neural Networks: A Comprehensive Foundation*, Second Edition, Prentice Hall, 1999.

[13] Y. L. Liu, Q. P. Zhong and Z. Zhang, Predictive model based on artificial neural net for fatigue performances of prior-corroded aluminum alloys, *Acta Aeronautica et Astronautica Sinica*, vol.218, pp.135-139, 2001.

[14] K. Xu, M. Xie and L. C. Tang, Application of neural networks in forecasting engine systems reliability, *Applied Soft Computing*, vol.2, pp.255-268, 2003.

[15] R. H. Dodier and G. P. Henze, Statistical analysis of neural network as applied to building energy prediction, *Journal of Solar Energy Engineering*, vol.2, pp.19-27, 2004.

[16] S. J. Yoo, Y. H. Choi and J. B. Park, Generalized predictive control based on self-recurrent wavelet neural network for stable path tracking of mobile robots: Adaptive learning rates approach, *IEEE Transactions on Circuits and Systems I: Regular Papers*, vol.53, pp.1381-1394, 2006.

[17] Z. B. Wang, G. F. Zhai, W. B. Ren, X. Y. Huang and Q. Yu, Research on accelerated storage degradation testing for aerospace electromagnetic relay, *The 58th IEEE Holm Conference on Electrical Contacts*, pp.139-146, 2012.